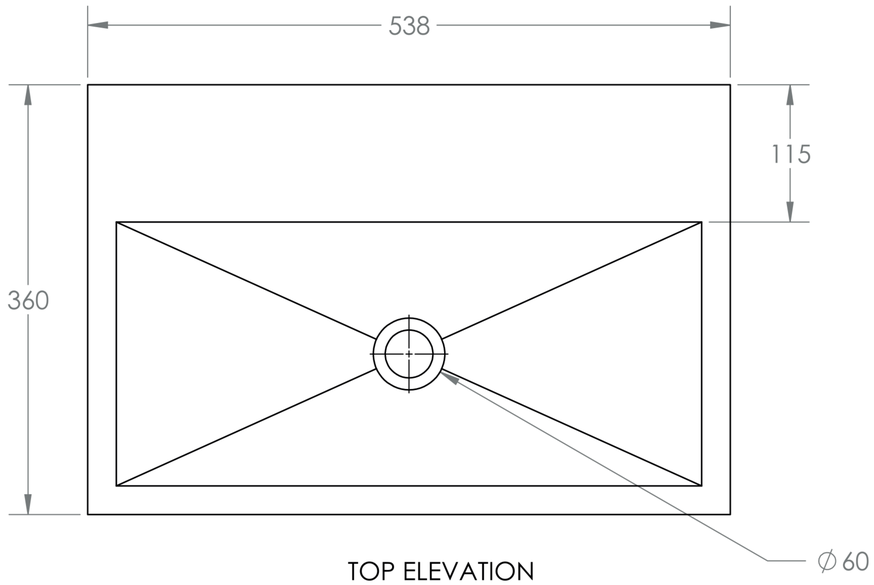

TOP ELEVATION

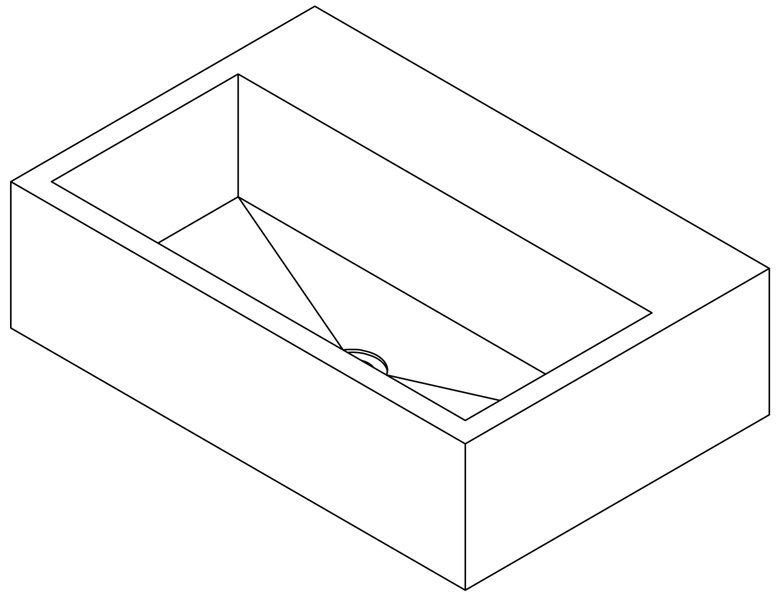

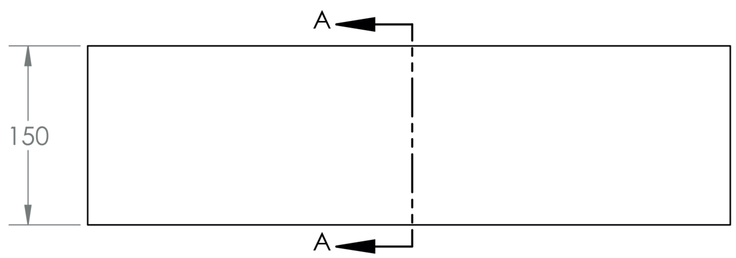

FRONT ELEVATION

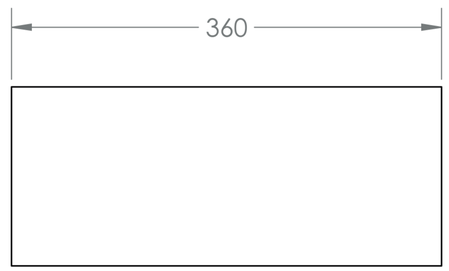

SIDE ELEVATION

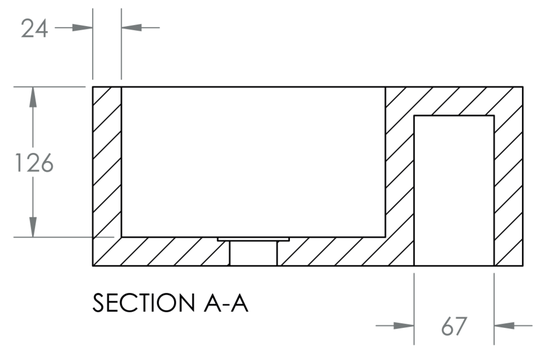

SECTION A-A

UNLESS OTHERWISE SPECIFIED: DIMENSIONS ARE IN MILLIMETERS SURFACE FINISH: TOLERANCES: LINEAR: ANGULAR:	FINISH:				DEBURR AND BREAK SHARP EDGES	DO NOT SCALE DRAWING / REVISION
	NAME	SIGNATURE	DATE			TITLE:
DRAWN						
CHK'D						
APPV'D						
MFG						
Q.A				MATERIAL:		DWG NO. LEDGE BASIN — A3
				WEIGHT:		SCALE:1:5 — SHEET 1 OF 4

THE Poured PROJECT